FVQ100-125-140C

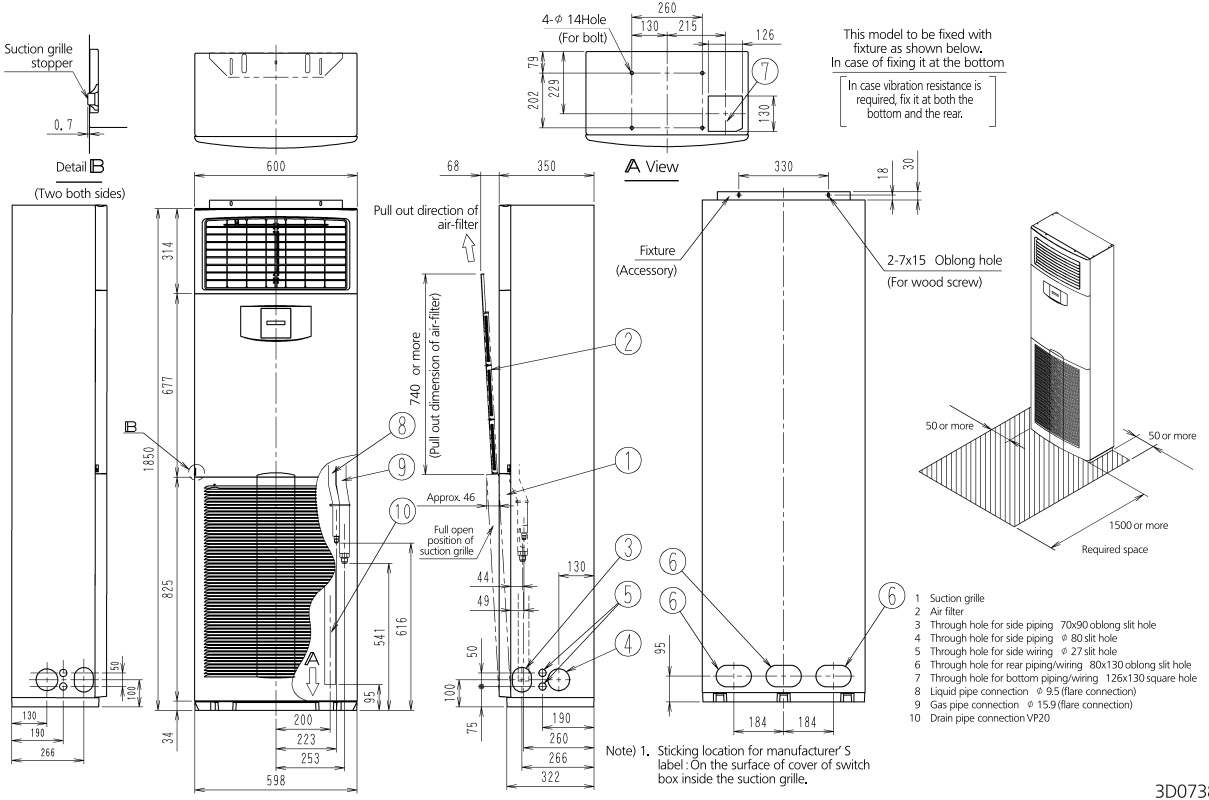

Note) 1. Sticking location for manufacturer' S label : On the surface of cover of switch box inside the suction grille.

3D073847