3MXM40-52N

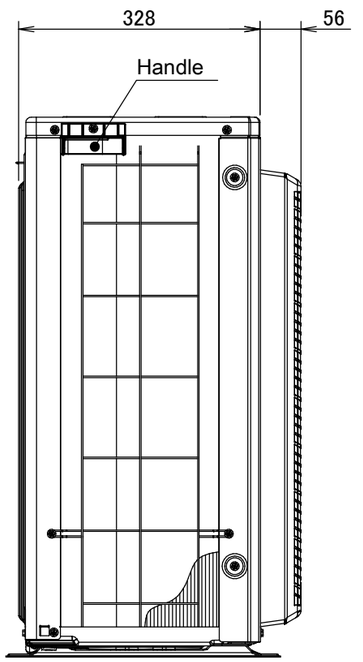

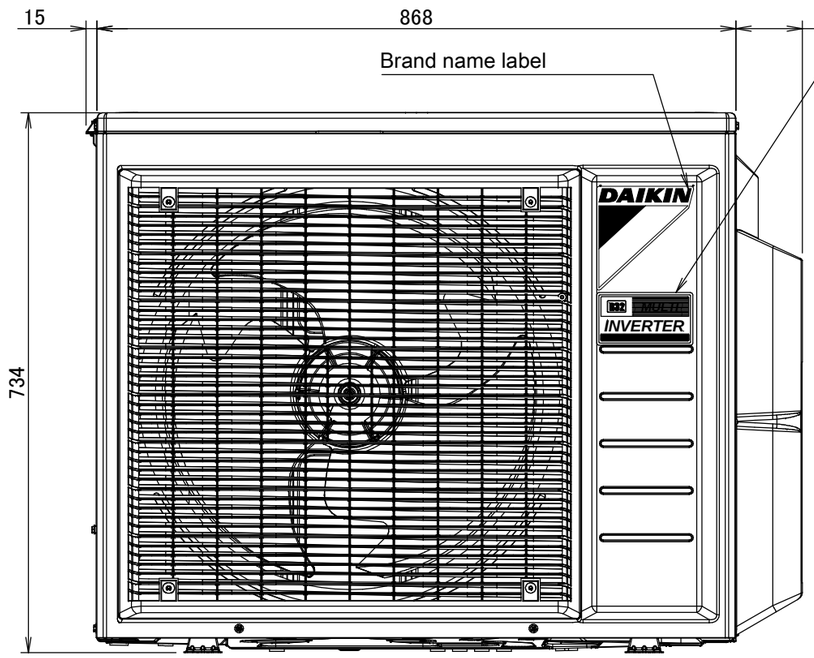

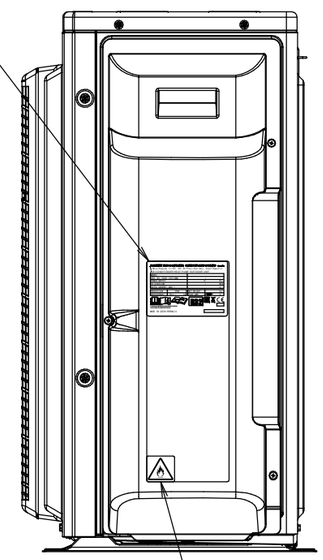

In case of removing the stop valve cover.

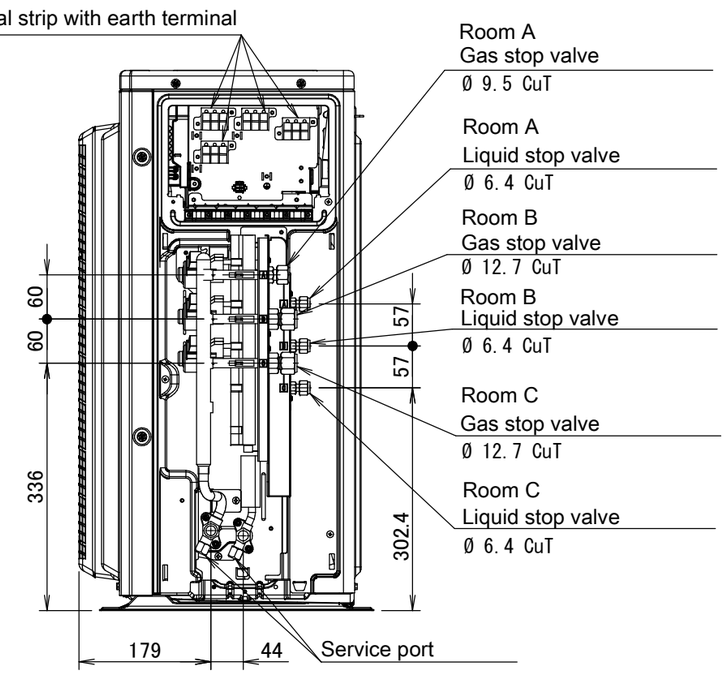

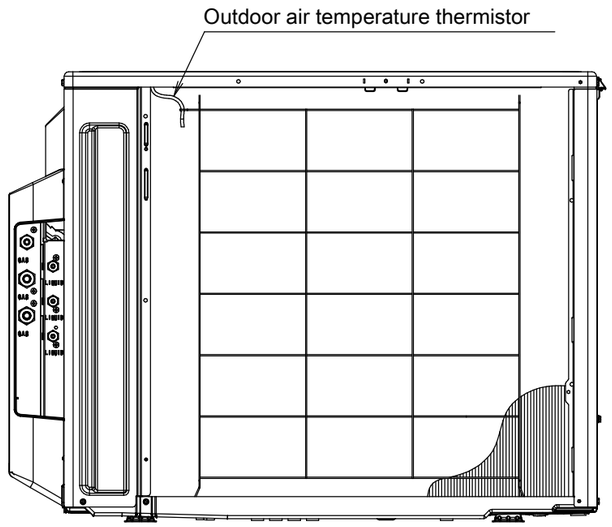

Rear view

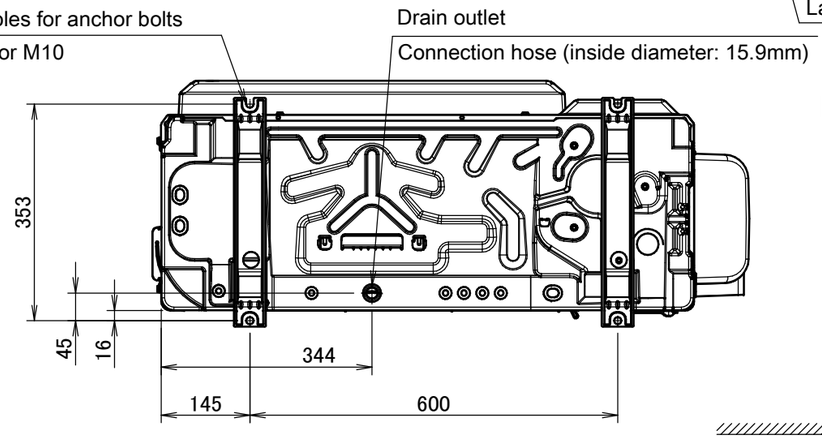

Bottom view

Minimum space for air passage

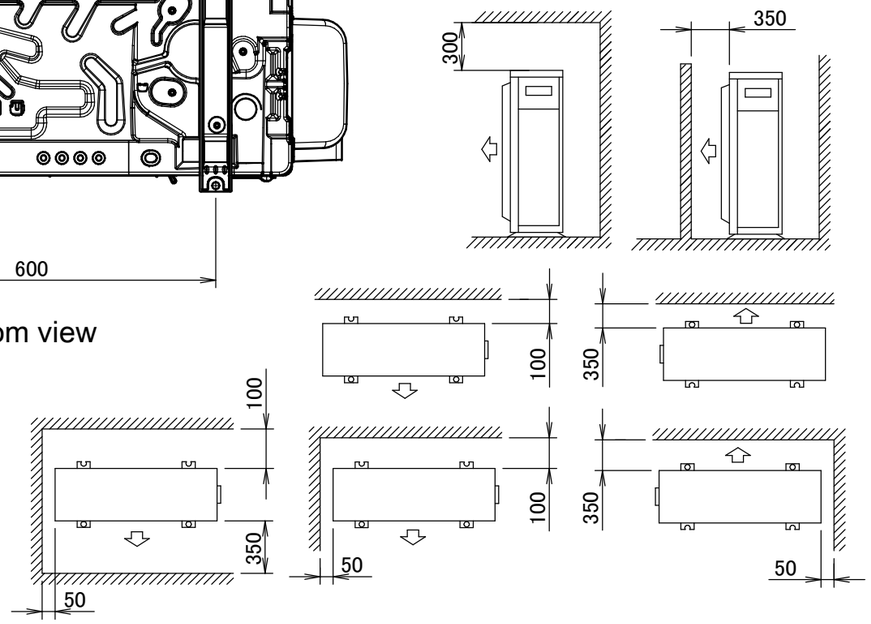

3D102035A