4MXM80M

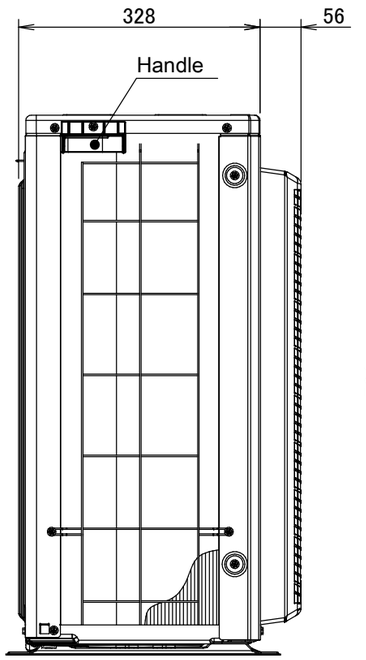

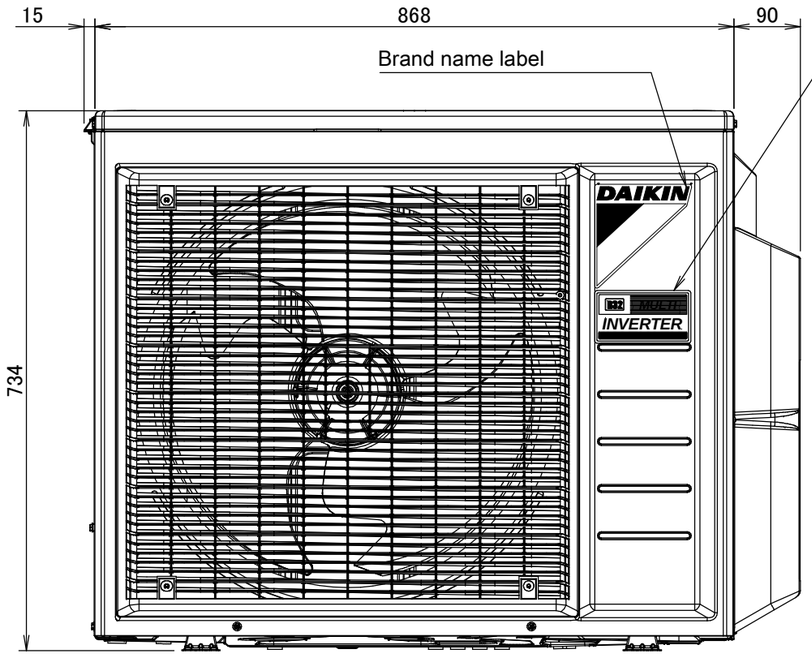

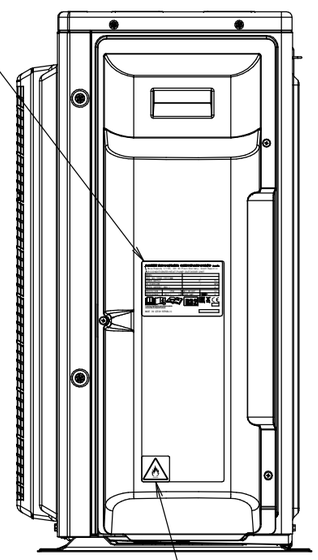

In case of removing the stop valve cover.

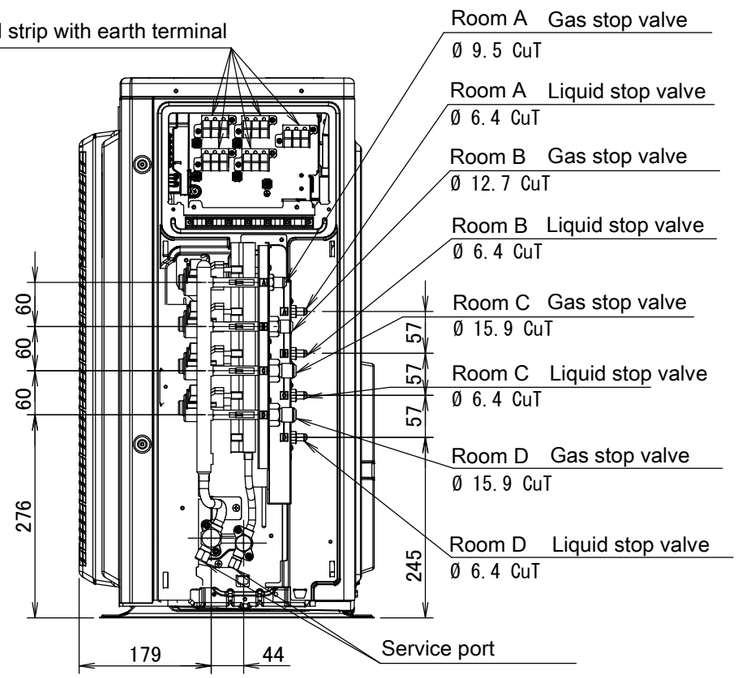

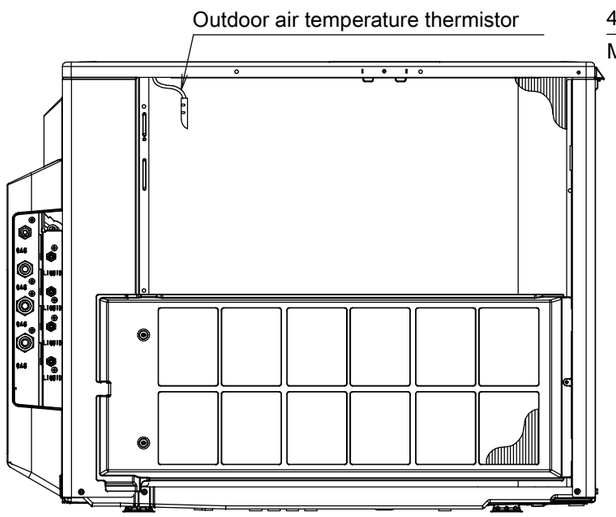

Rear view

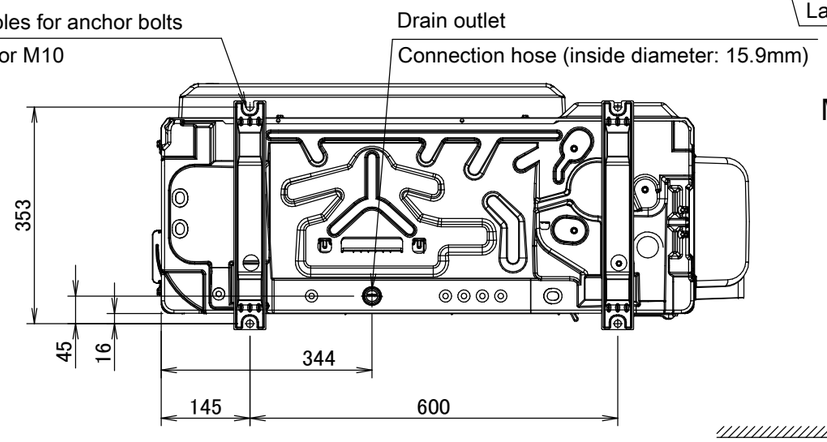

Bottom view

Minimum space for air passage

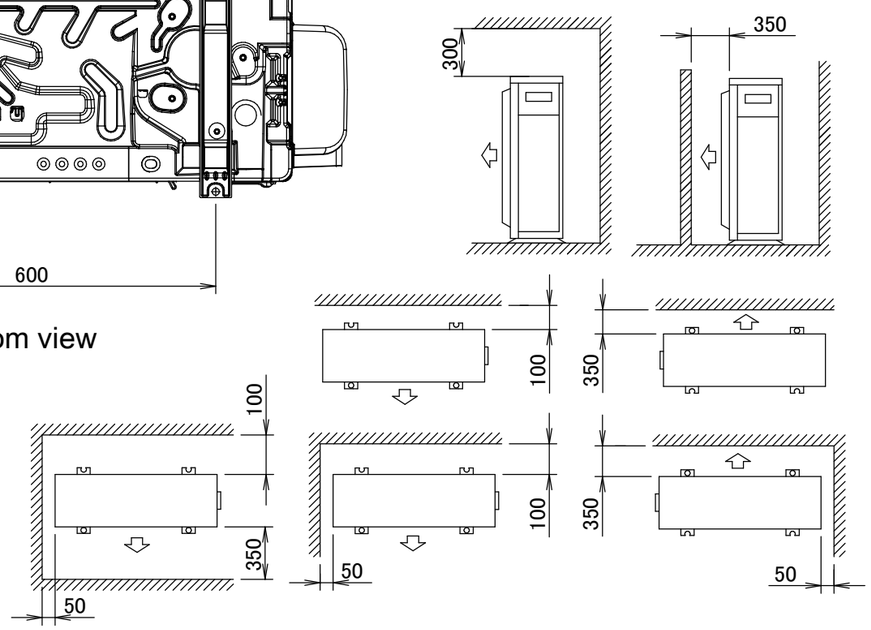

3D102773