FTX-JV

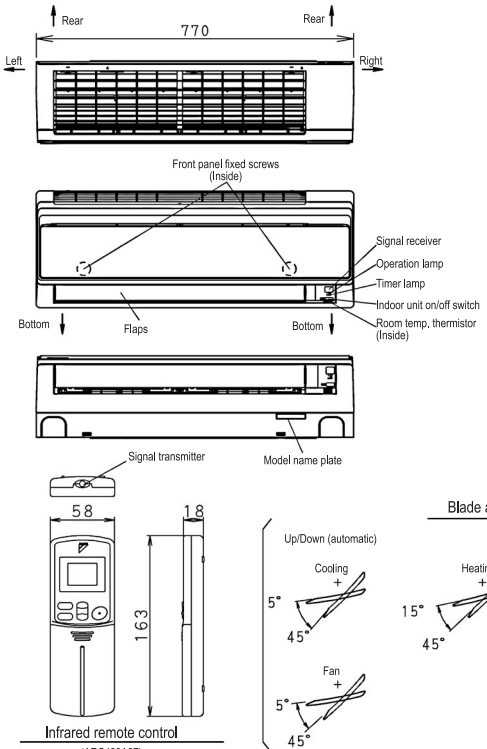

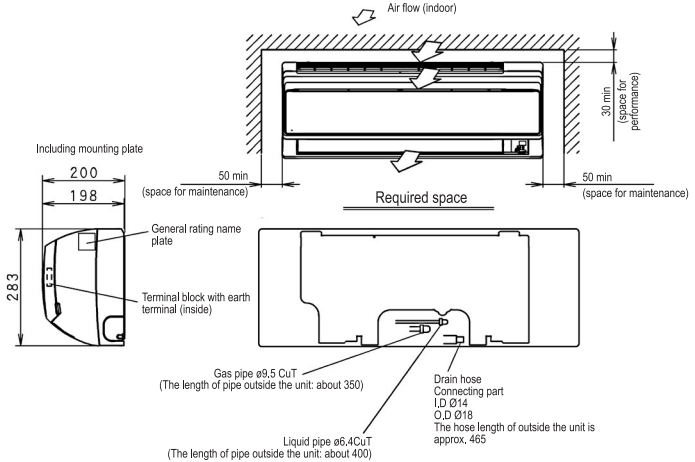

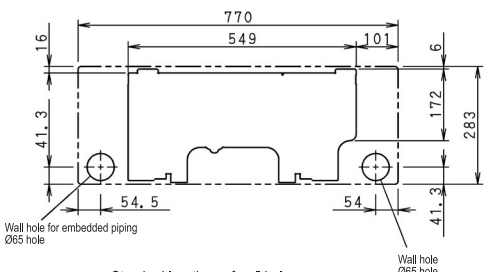

3D058481A

NOTES

1. The mark (→) shows piping direction.