RKS50G

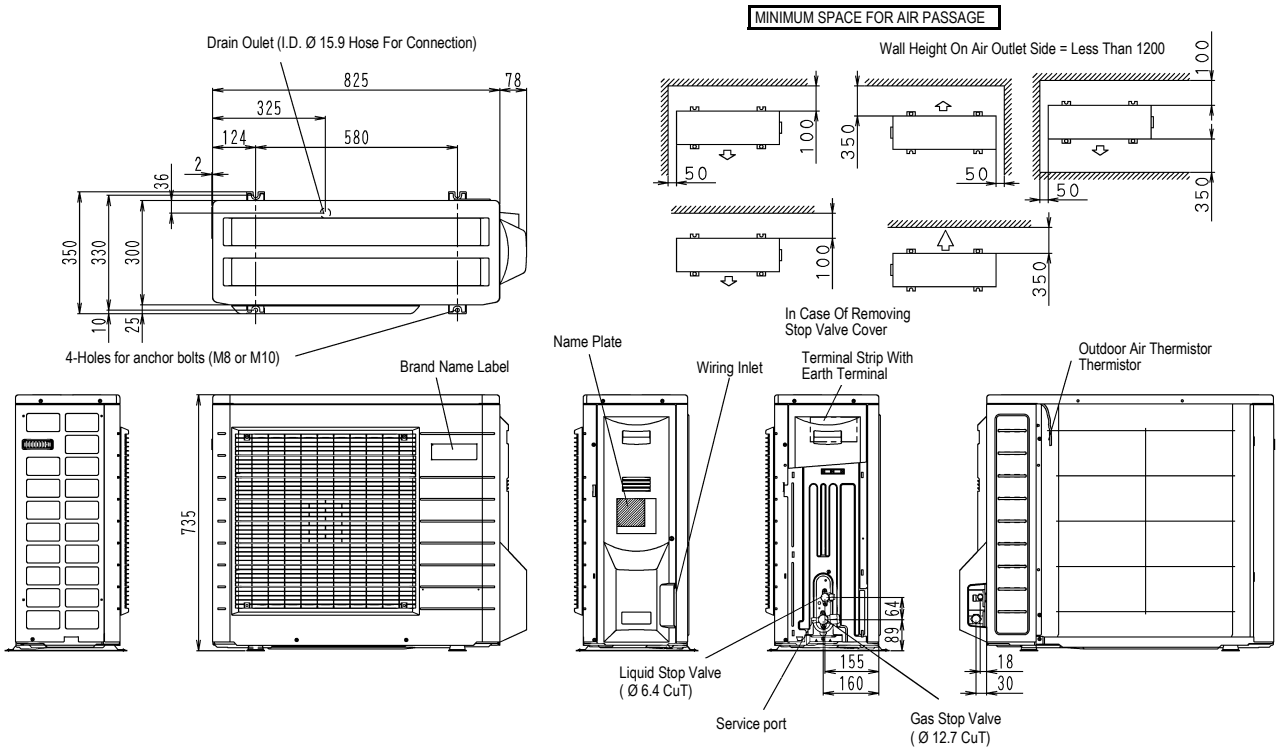

3D051657H