2MXS40G

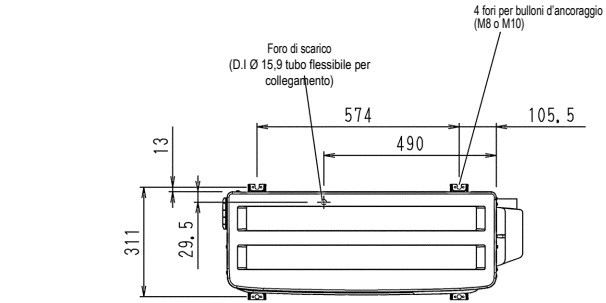

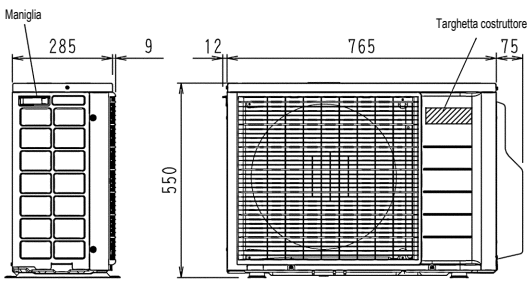

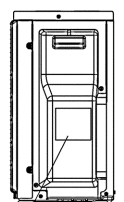

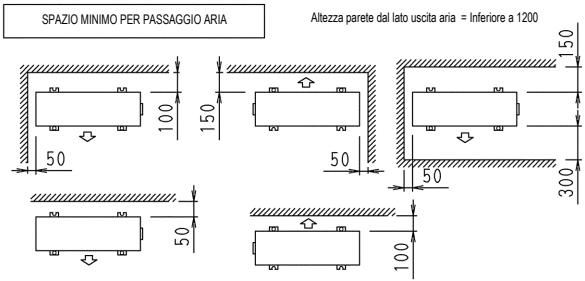

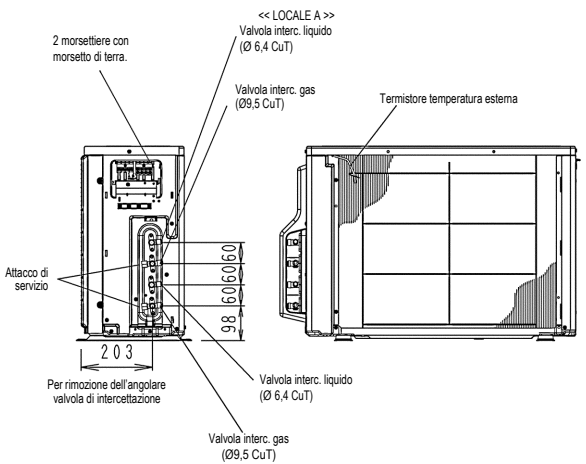

3D058712