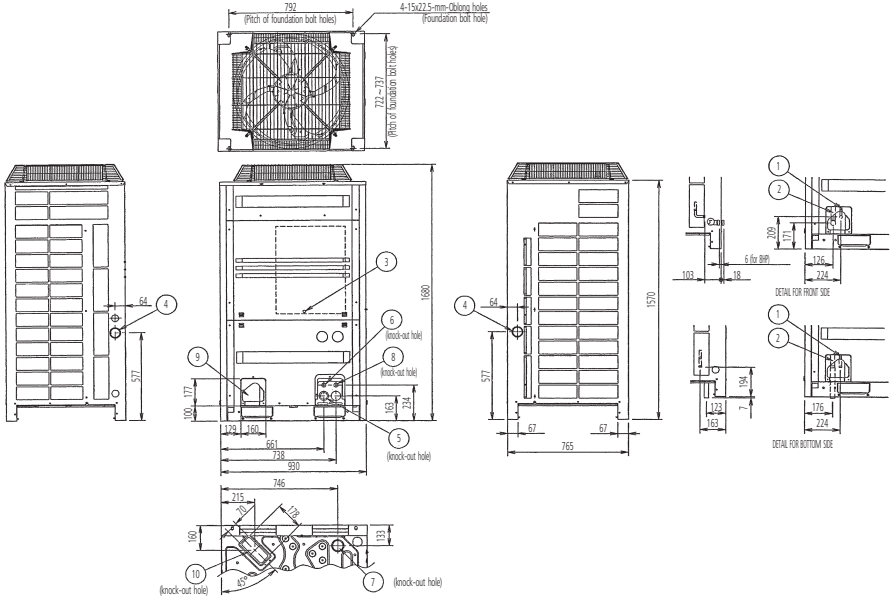

No.	Parts name	Remarks
1	Liquid pipe connection port	See note 2.
2	Gas pipe connection port	See note 2.
3	Grounding terminal	Inside of switch box (M8)
4	Power cord routing hole (side)	ø62
5	Power cord routing hole (front)	ø45
6	Power cord routing hole (front)	ø27
7	Power cord routing hole (bottom)	ø65.5
8	Wire routing hole (front)	ø27
9	Pipe routing hole (front)	
10	Pipe routing hole (bottom)	

NOTES

1 Detail for front side and detail for bottom side indicate the dimensions after fixing the attached piping.

2 Gas pipe [Heat pump type]
ø28.6 Brazing connection 12HP type
Liquid pipe [Heat pump type]
ø12.7 Brazing connection 12HP type